三一精工 门禁电源 Access Control Power Supply MJ-60A



■ 特性 Characteristic

◇国际通用全范围交流输入

Universal AC input/ Full range

◇自动保护功能：具备短路、过载、过温保护。

Automatic protection function: a short circuit, overload, over temperature protection

◇具备完善的恒流恒压充电管理系统。

Has perfect constant current constant voltage charging management system.

◇蓄电池过放保护与短路保护，停电无缝对接。

Battery discharge protection and short circuit protection, power outage seamless docking.

◇带电压转换开关，方便使用。

Take the voltage switch, easy to use.

◇可根据用户选型定制

Can be customized according to user selection

电气规格 SPECIFICATION

型号 MODEL		MJ-60A		
输出 Output	直流电压 DC Voltage	13.8V	21V	30V
	额定电流 Rated Current	6A	5A	3A
	电流范围（备注6）Current Range（Note 6）	0～6A	0～5A	0～3A
	充电电压 Charging Voltage	13.8V	21V	/
	充电电流 Charge Current	0～1A	0～1A	/
	放电电压 Over Voltage	10.5V	15V	/
	额定功率 Rated Power	72W	90W	90W
	波纹与噪声最大（备注2）Ripple & Noise Max（Note2）	100mVp-p	100mVp-p	120mVp-p
	电压调整范围 Voltage Adj. Range	±10%	±10%	±10%
	电压精度（备注3）Voltage Tolerance（Note 3）	±5%	±5%	±5%
	线性调整率（备注4）Line Regulation（Note 4）	±1%	±1%	±1%
	负载调整率（备注5）Load Regulation（Note 5）	±1%	±1%	±1%
	效率（Typ.）Efficiency（Typ.）	84%	85%	82%
	启动、上升时间 Setup、Rise Time	500ms, 30ms/220VAC		
	保持时间（Typ.）Hold up time（Typ.）	30ms/220VAC		
输入 Input	电压范围 Voltage Range	100～240VAC（承受 300VAC 浪涌输入 5S, 无损坏）(Withstand 300VAC surge input 5 second, No damage)		
	频率范围 Frequency Range	50/60Hz		
	交流电流（Typ.）Ac Current（Typ.）	1.1A/220VAC	1.3A/220VAC	1A/220VAC
	浪涌电流（Typ.）Inrush Current（Typ.）	冷启动 Cold Start：70A/220VAC		
	漏电流（Typ.）Leakage Current（Typ.）	＜2mA/240VAC		
保护 Protection	短路保护	保护模式：二极管钳位，短路异常条件移除后可自动恢复 Protection type：Diode clamp，recovers automatically after fault condition is removed		
	过载保护 Over load	105%～150%		
		保护模式：打嗝模式，负载异常条件移除后可自动恢复 Protection type：Hiccup mode，recovers automatically after fault condition is removed		
	过压保护 Over Voltage	115%～150%		
		保护模式：打嗝模式，过压异常条件移除后可自动恢复 Protection type：Hiccup mode，recovers automatically after fault condition is removed		
环境 Environment	工作温度 Working Temp	-10℃～70℃		
	工作湿度 Working Humidity	20～90%RH, 无冷凝 non-condensing		
	储存温度、湿度 Storage Temp、Humidity	-20℃～75℃ 10～98%RH, 无冷凝 non-condensing		
	温度系数 Temp. Coefficient	±0.03%/℃（0～50℃）(+5V)		
	耐振荡 Vibration	10～500Hz, 5G 10 分钟/周期，X、Y、Z 轴各 60 分钟 10Min/1 cycle，period for 60min,each along X,Y,Z axes		
安规和电磁兼容（备注7）Safety & EMC（Note 7）	安全规范 Safety Standards	GB4943，EN60950		
	耐压 Withstand Voltage	I/P-O/P:3KVAC 10ms I/P-FG:1.5KVAC 10ms		
	绝缘阻抗 Isolation Resistance	I/P-O/P 3KVAC 10mA 5s I/P-FG 1.5KVAC 10mA 5s		
	电磁兼容发射 EMI Conduction Radiation	符合 Compliance to :EN55022, EN61000-3-2, 3, FCC part15, GB9254 class B, GB17625.1		
	电磁兼容抗扰度 EMS Immunity	符合 Compliance to :EN61000-4-2, 3, 4, 5, 6, 8, 11, A 级轻工业标准 light industry level, criteria A		
其它 Others	MBTF	≥100000h.		
	尺寸 Dimension/包装 Packing	180*230*80mm(L*W*H)/ 1.5KG;10pcs/15Kg		
备注 Note	1. 如未特别说明，所有规格参数均在输入为 220VAC、额定负载、25℃环境温度下进行测量。 All parameters NOT specially mentioned are measured at 220VAC input, rated load and 25℃ of ambient temperature. 2. 波纹和噪声测量方法：使用一条 12″双绞线，同时终端要并联 0.1uF 和 47uF 的电容，在 20MHZ 带宽下进行量测。 Ripple & noise are measured at 20MHz of bandwidth by using a 12" twisted pair-wire terminated with a 0.1uf &47uf parallel capacitor 3. 精度：包含设定误差，线性调整率和负载调整率。 Tolerance: includes set up tolerance, line regulation and load regulation 4. 线性调整率测量方法：在额定负载下，从低电压到高电压测试。 Line regulation is measured from low line to high line at rated load. 5. 负载调整率测量方法：从 20%到 100%额定负载，其他输出在 60%额定负载。 Load regulation is measured from 20% to 100% rated load, and other output at 60% rated load. 6. 电流范围内输出正常，但总输出功率不可超过额定输出功率。 Each output can work within current range. But total output power can't exceed rated output power 7. 电源被视为系统内元件的一部分，需结合终端设备进行电磁兼容相关测试。 The power supply is considered a component which will be installed into a final equipment. The final equipment must be re-confirmed that is still meets EMC directives. 8. 启动时间是在冷启动状态下测得，快速频繁开关机可能会使启动时间延长。 Length of set up time is measured at cold first start. Turning ON/OFF the power supply very quickly may lead to increase of the setup time			

单位：mm

外观尺寸图 Appearance size chart

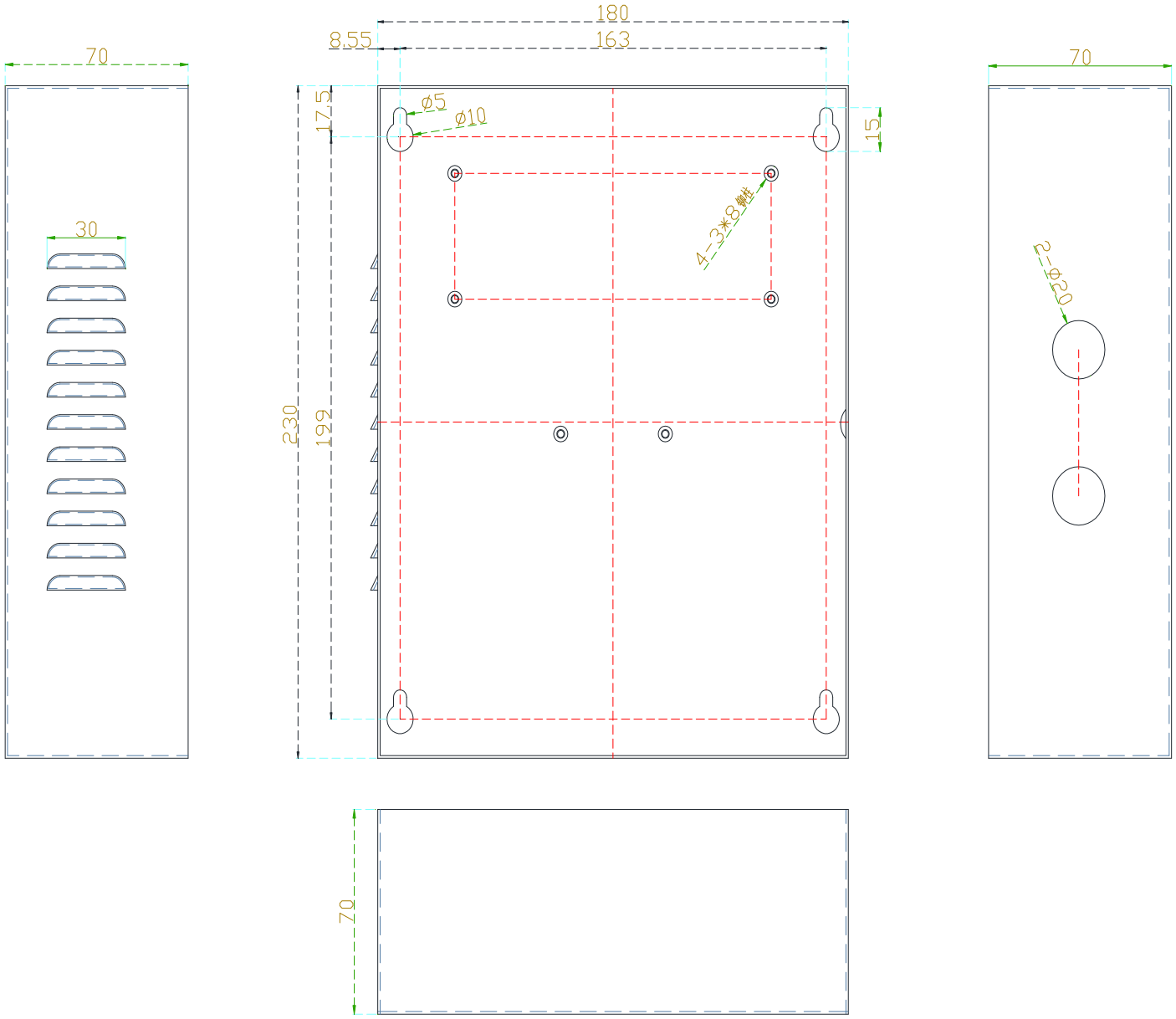

接线图 wiring diagram

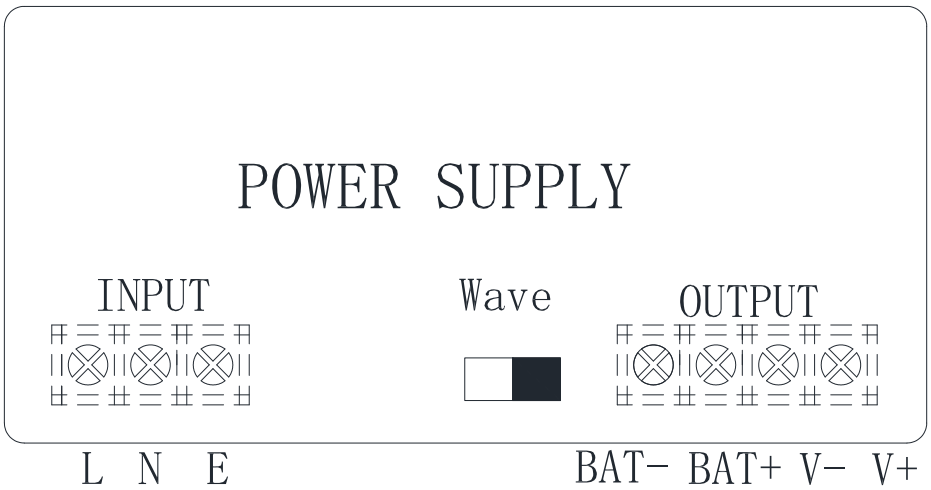

电气原理图 Electrical schematic diagram

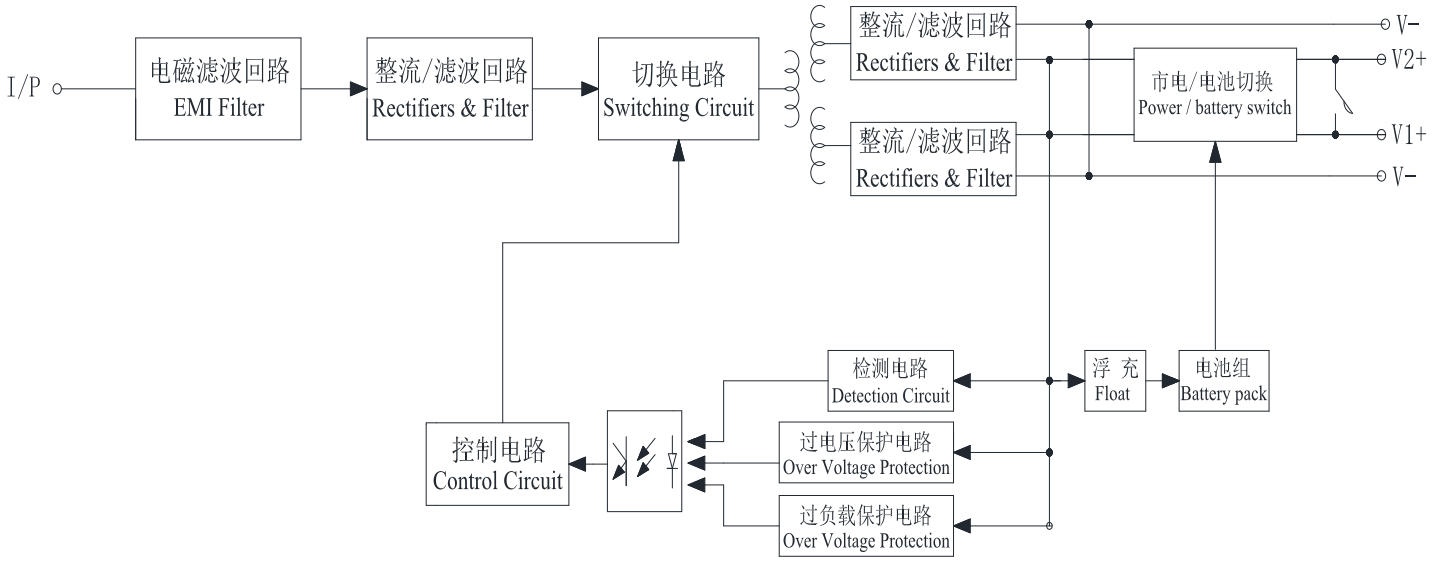

减额曲线 Derating Curve

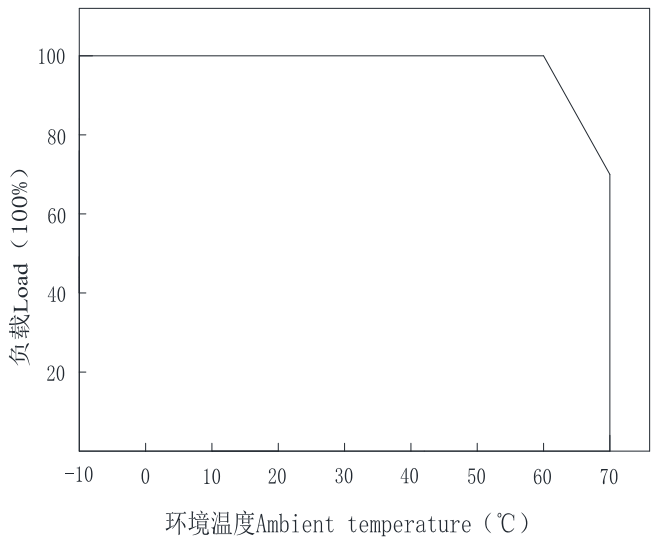

静态特性曲线 Static Characteristics

