三一精工 门禁电源 Access Control Power Supply MJ-1250DK

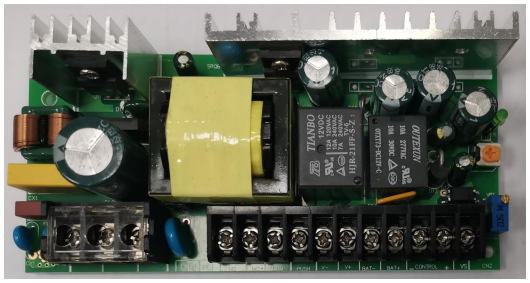

■ 特性 Characteristic

◇国际通用全范围交流输入
Universal AC input/ Full range
◇自动保护功能：具备短路、过载、过温保护。
Automatic protection function: a short circuit, overload, over temperature protection
◇设 NO/ NC (常开、常闭)功能，适合不同类型电锁。
Have NO/NC (normally open, normally closed) function, suitable for different types of electric lock.
◇设延时开锁控制，时间在 0～30s 可调。
A delay lock control, adjustable time in 0 ~ 30 s.
◇蓄电池过放保护与短路保护，停电无缝对接。
Battery discharge protection and short circuit protection, power outage seamless docking.
◇直接控制电锁，减少门禁器负荷。
Directly control the electric lock, reduce entrance guard unit load.
◇可根据用户选型定制
Can be customized according to user selection

型号 MODEL		MJ-1250DK	MJ-1830DK
输出 Output	直流电压 DC Voltage	12V	18V
	额定电流 Rated Current	5A	3.3A
	电流范围（备注6）Current Range (Note 6)	0～5A	0～3.3A
	充电电压 Charging Voltage	13.5V	21V
	充电电流 Charge Current	0～1A	0～1A
	放电电压 Over Voltage	10.5V	15V
	额定功率 Rated Power	60W	60W
	波纹与噪声最大（备注2）Ripple & Noise Max (Note2)	120mVp-p	150mVp-p
	电压调整范围 Voltage Adj. Range	±10%	±10%
	电压精度（备注3）Voltage Tolerance (Note 3)	±5%	±5%
	线性调整率（备注4）Line Regulation (Note 4)	±1%	±1%
	负载调整率（备注5）Load Regulation (Note 5)	±1%	±1%
	效率（Typ.）Efficiency (Typ.)	83%	85%
	启动、上升时间 Setup、Rise Time	500ms, 30ms/220VAC	
	保持时间（Typ.）Hold up time (Typ.)	30ms/220VAC	
输入 Input	电压范围 Voltage Range	100～240VAC（承受 300VAC 浪涌输入 5S, 无损坏）(Withstand 300VAC surge input 5 second, No damage)	
	频率范围 Frequency Range	50/60Hz	
	交流电流（Typ.）Ac Current (Typ.)	1.2A/110VAC	0.6A/220VAC
	浪涌电流（Typ.）Inrush Current (Typ.)	冷启动 Cold Start：60A/220VAC	
	漏电流（Typ.）Leakage Current (Typ.)	＜2.5mA/240VAC	
保护 Protection	短路保护	保护模式：二极管钳位，短路异常条件移除后可自动恢复 Protection type：Diode clamp，recovers automatically after fault condition is removed	
	过载保护 Over load	115%～175%	
		保护模式：打嗝模式，负载异常条件移除后可自动恢复 Protection type：Hiccup mode，recovers automatically after fault condition is removed	
	过压保护 Over Voltage	115%～150%	
		保护模式：打嗝模式，过压异常条件移除后可自动恢复 Protection type：Hiccup mode，recovers automatically after fault condition is removed	
环境 Environment	工作温度 Working Temp	-10℃～60℃	
	工作湿度 Working Humidity	20～90%RH, 无冷凝 non-condensing	
	储存温度、湿度 Storage Temp、Humidity	-20℃～75℃ 10～98%RH, 无冷凝 non-condensing	
	温度系数 Temp. Coefficient	±0.03%/℃（0～50℃）(+5V)	
	耐振荡 Vibration	10～500Hz, 5G 10 分钟/周期，X、Y、Z 轴各 60 分钟 10Min/1 cycle，period for 60min,each along X,Y,Z axes	
安规和电磁兼容（备注7）Safety & EMC (Note 7)	安全规范 Safety Standards	GB4943，EN60950	
	耐压 Withstand Voltage	I/P-O/P:2.5KVAC 10s I/P-FG:1.5KVAC 10s	
	绝缘阻抗 Isolation Resistance	I/P-O/P 2.5KVAC 10mA 5s I/P-FG 1.5KVAC 10mA 5s	
	电磁兼容发射 EMI Conduction Radiation	符合 Compliance to :EN55022, EN61000-3-2, 3, FCC part15, GB9254 class B, GB17625.1	
	电磁兼容抗扰度 EMS Immunity	符合 Compliance to :EN61000-4-2, 3, 4, 5, 6, 8, 11, A 级轻工业标准 light industry level, criteria A	
其它 Others	MBTF	≥100000h.	
	尺寸 Dimension/包装 Packing	202*162*72mm(L*W*H)/ 0.6KG;20pcs/12Kg	
备注 Note	1. 如未特别说明，所有规格参数均在输入为 220VAC、额定负载、25℃环境温度下进行测量。 All parameters NOT specially mentioned are measured at 220VAC input, rated load and 25℃ of ambient temperature. 2. 波纹和噪声测量方法：使用一条 12″双绞线，同时终端要并联 0.1uF 和 47uF 的电容，在 20MHZ 带宽下进行量测。 Ripple & noise are measured at 20MHz of bandwidth by using a 12" twisted pair-wire terminated with a 0.1uf &47uf parallel capacitor 3. 精度：包含设定误差，线性调整率和负载调整率。 Tolerance: includes set up tolerance, line regulation and load regulation 4. 线性调整率测量方法：在额定负载下，从低电压到高电压测试。 Line regulation is measured from low line to high line at rated load. 5. 负载调整率测量方法：从 20%到 100%额定负载，其他输出在 60%额定负载。 Load regulation is measured from 20% to 100% rated load, and other output at 60% rated load. 6. 电流范围内输出正常，但总输出功率不可超过额定输出功率。 Each output can work within current range. But total output power can't exceed rated output power 7. 电源被视为系统内元件的一部分，需结合终端设备进行电磁兼容相关测试。 The power supply is considered a component which will be installed into a final equipment. The final equipment must be re-confirmed that is still meets EMC directives. 8. 启动时间是在冷启动状态下测得，快速频繁开关机可能会使启动时间延长。 Length of set up time is measured at cold first start. Turning ON/OFF the power supply very quickly may lead to increase of the setup time		

外观尺寸图 Appearance size chart

单位：MM

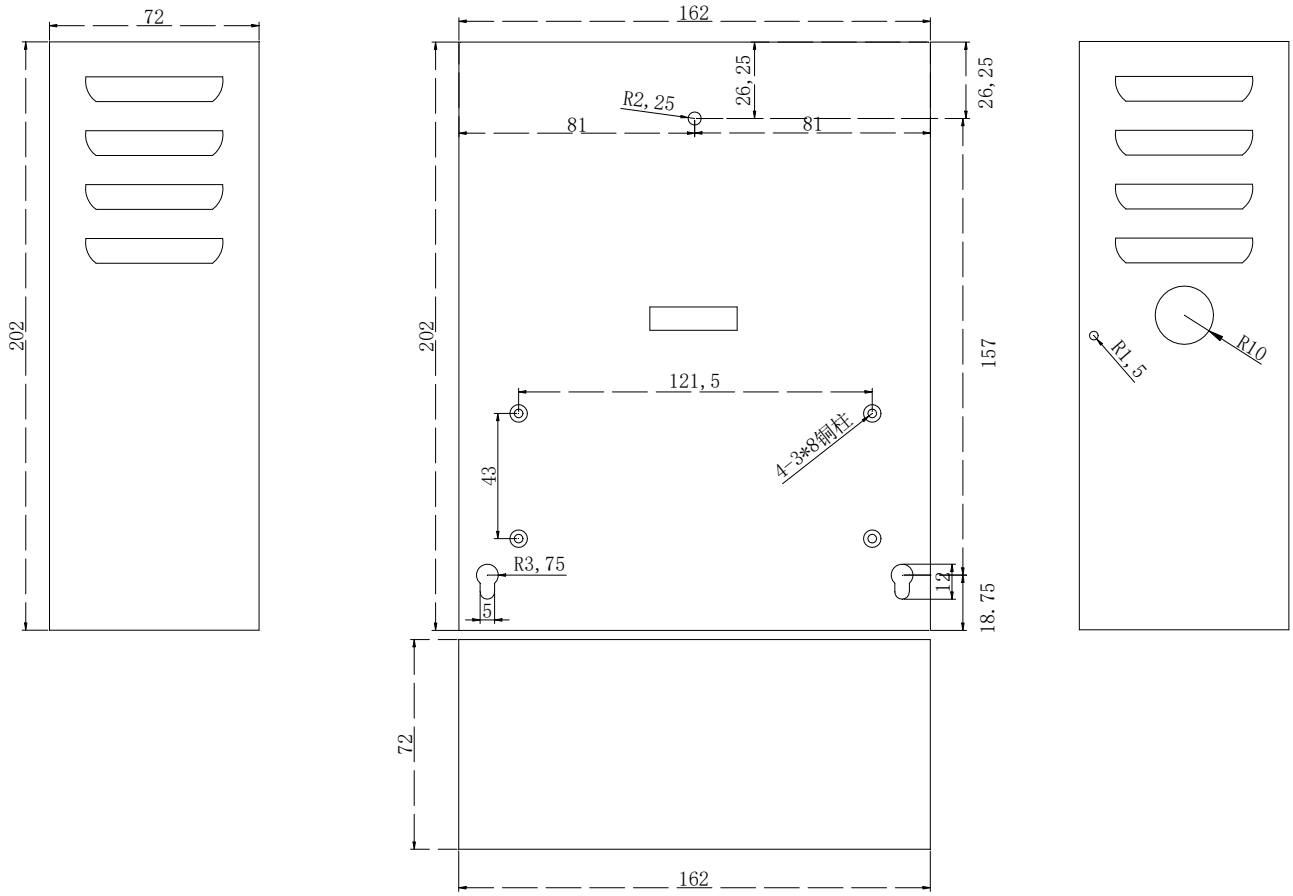

接线图wiringdiagram

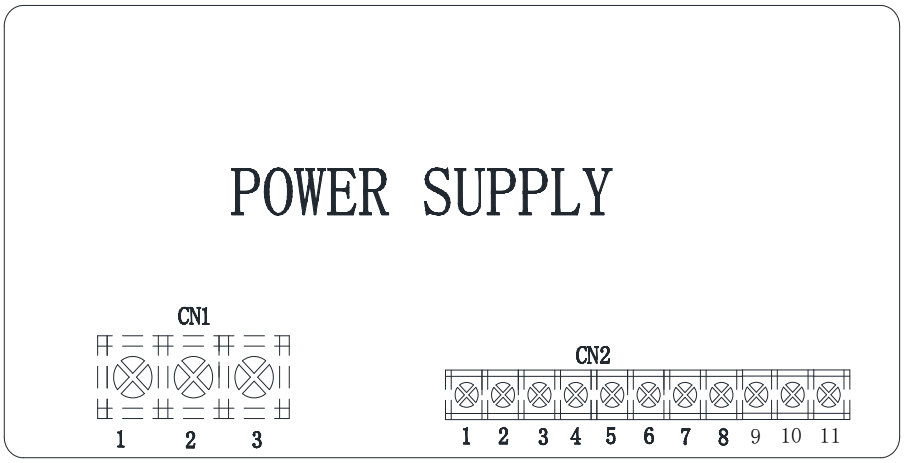

脚位 Pin No.	引进功能 Assignment
CN1 1	AC/L
CN1 2	AC/N
CN1 3	PE ⏚

脚位 Pin No.	引进功能 Assignment
CN2 1	NO(常开)
CN2 2	NC(常闭)
CN2 3	COM(地线)
CN2 4	PUSE(开锁)
CN2 5	V-
CN2 6	V+
CN2 7	BAT-
CN2 8	BAT+
CN2 9	-CONTROL
CN2 10	+CONTROL
CN2 11	VS

电气原理图 Electrical schematic diagram

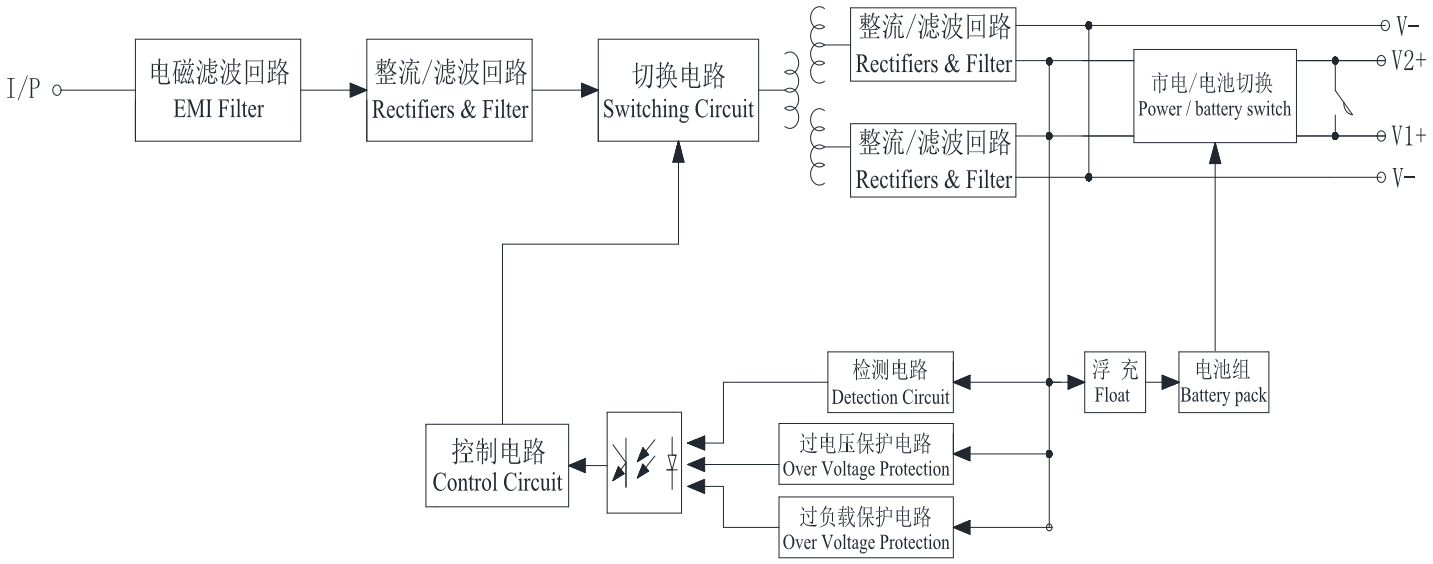

减额曲线 Derating Curve

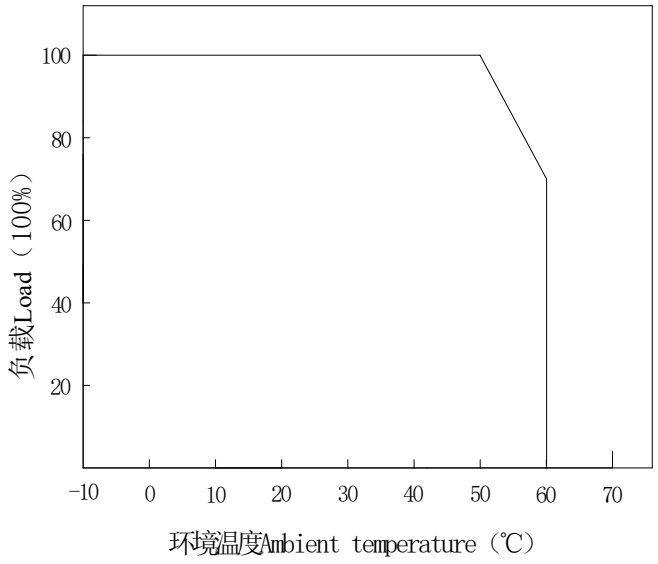

静态特性曲线 Static Characteristics

